CHANGZHOU XINGGAN DRYING EQUIPMENT CO.,LTD
Tel：+86-519-88900188 Mobile：+8618661216636
Wechat: zlx635771893 E-mail: franklxz@xggz.com

CH Series Trough Type Mixer

Changzhou Xinggan Drying Equipment Co.,LTD

Introduction

CH trough type mixer is suitable for mixing powder or liquid materials so as to mix main material and auxiliary one on the basis of fixed proportion.

Application

It is well adopted in industries like pharmacy,chemicals, food,and so on.

Features

1、Those parts closely contacting the materials are all made by stainless steel. There is very little space between blades and barrel and is no dead corner.
2、Sealing devices are built on two ends of stirring shafts.
3、All of them are capable of keeping materials from leaking.

Working Principle

The trough mixer is driven by the motor reducer unit to drive the main shaft passing through the hopper to rotate the S-shaped stirring paddle, and the animal material is mixed radially and axially to reciprocate to achieve uniform mixing of the material.

Changzhou Yinggan Drying Equipment Co., LTD

Instructions For Use

1、A dry running test run should be carried out before use. Before the test run, the tightness of all the connections of the machine, the amount of lubricating oil of the reducer and the integrity of the electrical equipment should be checked, and then the main power switch should be turned on for a dry run test run. Respectively click the button for dumping and reset to check whether the working condition is in good condition, and perform processing after meeting the above requirements (the button for dumping and resetting cannot be used at the same time).

2、After feeding, the cover of the hopper must be covered to prevent the material from being shallowly discharged from the hopper. The cover is made of plexiglass to observe the mixing of the material. It stops when it is seated to prevent damage to the parts. After the material is poured, press the reset button to make the material trough compound to the original position.

TECHNICAL PARAMETERS

Model/Item	CH-100	CH-150	CH-200	CH-400
Motor Power(kw)	2.2	3	3	5.5
Stirring Speed(rpm)	24	24	24	24
Inverted Angle(°)	105	105	105	105
Weight(kg)	350	500	650	1200
Overall Dimension(mm)	1400×500×1000	1600×600×1100	1800×700×1200	2000×820×1460

Changzhou Xinggan Drying Equipment Co., LTD

More Photos

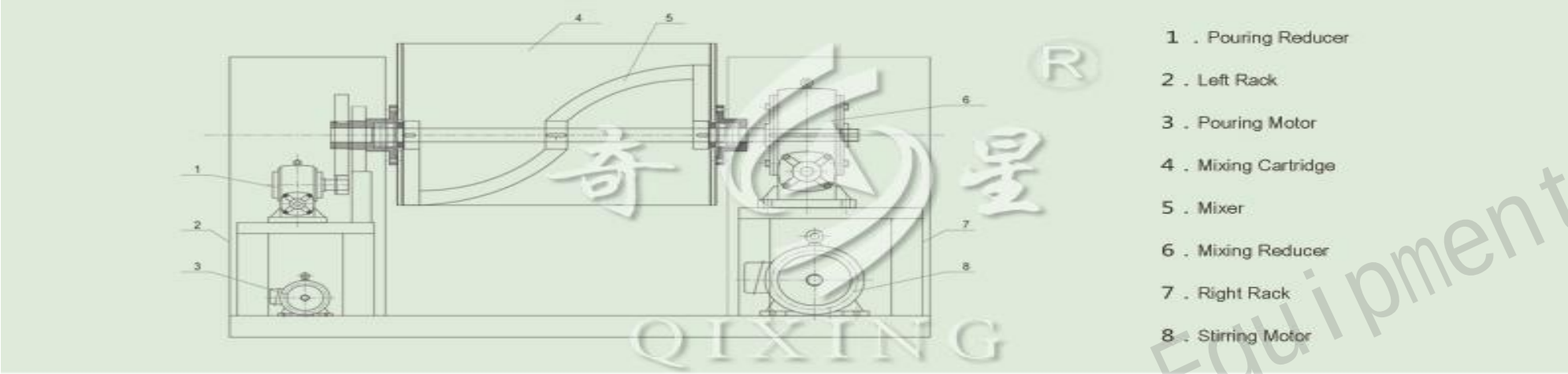

Changzhou Xinggan Drying Equipment Co., LTD