CHANGZHOU XINGGAN DRYING EQUIPMENT CO.,LTD
Tel：+86-519-88900188 Mobile：+8618661216636
Wechat: zlx635771893 E-mail: franklxz@xggz.com

SYH Series Three Dimensional Motion Mixer

Changzhou Xinggan Drying Equipment Co.,LTD

Introduction

SYH three dimensional motion mixer endows materials inside the cylinder with many chances of mixing due to its multiple motion dimensions. It enjoys the great effect of mixing, short time of mixing with high efficiency. Its uniformity degree is able to hit 99.9% with maximum loading capacity of 0.9 (that of ordinary mixer is about 0.4 to 0.6). With unique design of cylinder, SYH enjoys is praised by its well-polished inside and outside walls as well as no dead bands and pollution. It's quite convenient for workers to get finished products from SYH. In addition, it's also very easy to clean SYH three dimensional motion mixer.

Application

SYH three dimensional motion mixer can be used in the industries of pharmacy, chemical, food, electronics, machine, mining and so on.

Features

1、The cylinder could move in multiple directions and phenomena of layer or accumulation of material could be avoided because materials inside suffers no centrifugal force. There is the remarkable weight ratio in different parts and the mixing ratio is also high. For those reasons, this machine is quite competitive among various mixers.

2、The loading rate of cylinder could hit 90%, comparatively higher than that of ordinary ones-50%. It's also feature by the high efficiency and short mixing time.

Changzhou Xinggan Drying Equipment Co., LTD

3、The circular cylinder is well polished by advanced technology.
4、It is well adopted in some industries like pharmacy, chemicals, food, light industry, electronic industry, machinery industry, metallurgical, national defense industry and other science and technology industries.

Working Principle

During the operation of the three-dimensional motion mixer, due to the multi-directional operation of the mixing barrel, the flow and diffusion of various materials are accelerated during the mixing process, and at the same time, the specific gravity segregation and segregation of materials caused by the centrifugal force of the general mixer are avoided. Accumulation phenomenon, mixing without dead ends, can effectively ensure the best quality of the mixture.

TECHNICAL PARAMETERS

Model/Item	Volume (L)	Max. Loading Volume (L)	Max. Loading Weight (kg)	Speed of Main Shaft (r/min)	Power (kw)	Overall Dimension (mm)	Weight (kg)
SYH-5	5	4.5	1.5-2.7	0-20	0.25	600x1000x1000	100
SYH-15	15	13.5	4-8.1	0-20	0.37	800x1200x1000	200
SYH-50	50	45	15-27	0-20	1.1	1150x1400x1000	300
SYH-100	100	90	30-54	0-20	1.5	1250x1800x1550	800
SYH-200	200	180	50-108	0-15	2.5	1450x2000x1550	1200
SYH-400	400	360	100-216	0-15	4	1650x2200x1550	1200
SYH-600	600	540	150-324	0-13	5.5	1850x2500x1750	1500
SYH-800	800	720	200-432	0-10	7.5	2100x2650x2000	1700
SYH-1000	1000	900	250-540	0-10	11	2150x2650x2100	1800
SYH-1200	1200	1080	300-648	0-9	11	2000x3000x2260	2000
SYH-1500	1500	1350	400-810	0-9	15	2300x3200x2500	2400

Changzhou Xinggan Drying Equipment Co., LTD

More Photos

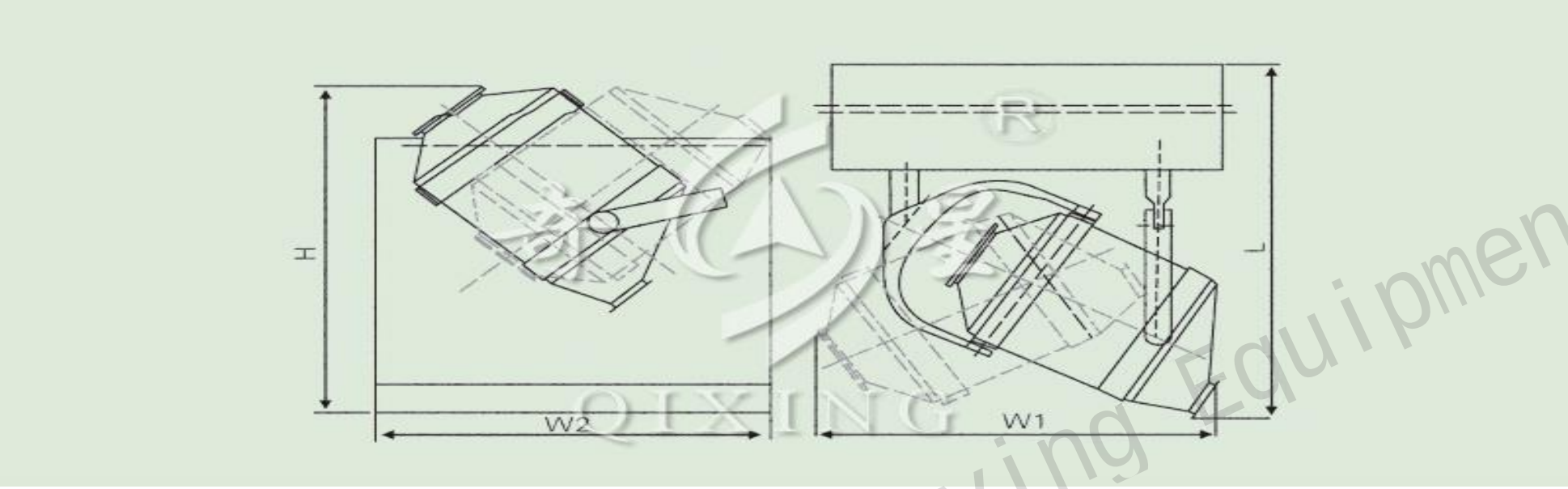

Qingdao Xinqian Drying Equipment Co., LTD